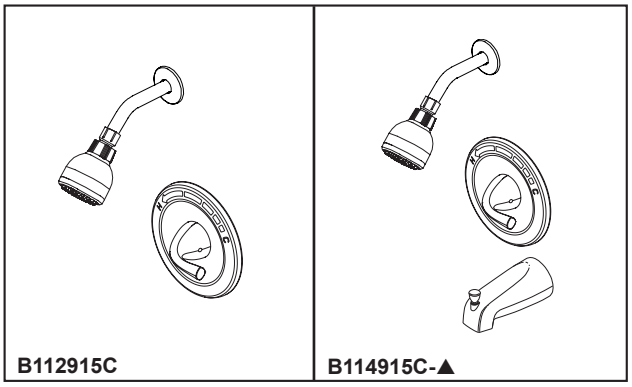

see what Delta can do℠

TUB AND SHOWER FAUCET

- Foundation® Collection
- Shower Only (B112915C Series)
- Tub/Shower (B114915C Series)

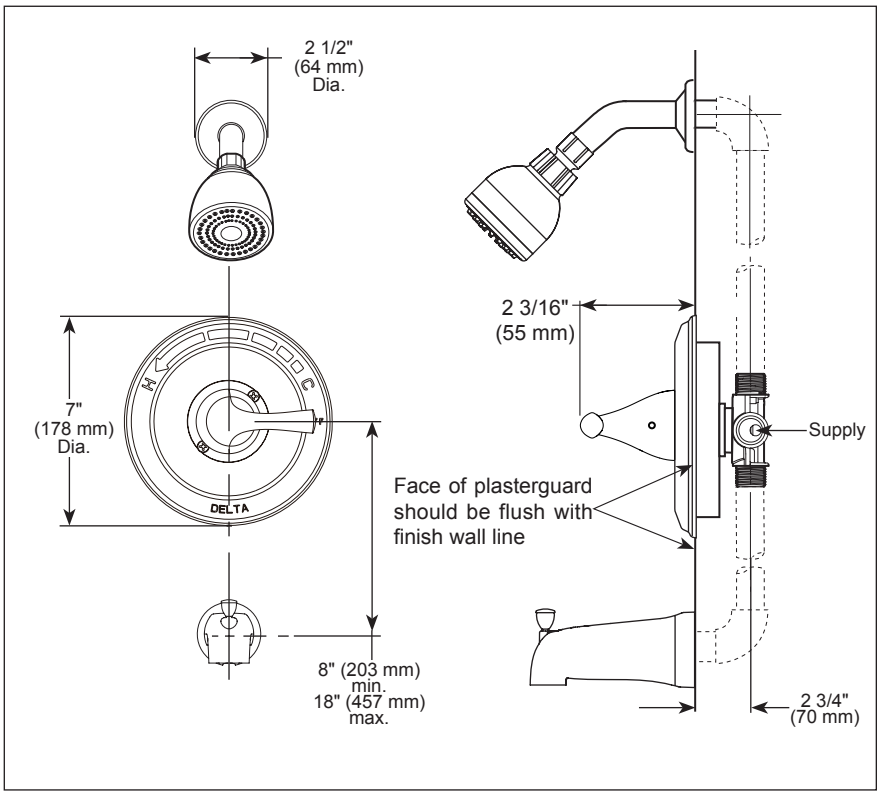

FEATURES:

- Monitor® 14 Series pressure balanced bath single handle mixing valve trim
- Touch-Clean® spray holes

STANDARD SPECIFICATIONS:

- Max flow rate 1.75 gpm @ 80 psi, 6.6 L/min @ 550 kPa
- Maintains a balanced pressure of hot and cold water even when a valve is turned on or off elsewhere in the system
- For use with MultiChoice® Universal rough valve body (R10000 Series)
- Back-to-back installation capability
- Solid brass forged body
- Temperature only controlled with handle
- Field adjustable means to limit handle rotation into hot water zone
- 120° maximum handle rotation
- Tub port maximum flow rate 6.0 gpm @ 60 psi with R10000-UNBX
- Shower arm overall horizontal length = 5 1/2" (138 mm), including threaded ends
- Hot & Cold temperature indicators on escutcheon
- All parts replaceable from the front of the valve
- Pull-up tub spout: 1/2" NPT iron pipe thread connection or 1/2" copper spout tube soldering connection
- 1 Spray settings include: Full Body spray

WARRANTY:

- Parts and Finish – Lifetime limited warranty; or for commercial purchasers, 10 years for multi-family residential (apartments and condominiums) and 5 years for all other commercial uses, in each case from the date the product is received by the original purchaser or their authorized representative (installation contractor, etc.).
- Please go to www.deltafaucet.com for the complete details of our limited warranty.

WaterSense Meets EPA Criteria
Certified by CSA Group
SHOWER HEAD(S)
POMME(S) DE DOUCHE
CABEZA(S) DE REGADERA

COMPLIES WITH:

- ASME A112.18.1 / CSA B125.1
- ASSE 1016 / ASME A112.1016 / CSA B125.16
- EPA WaterSense®
- ♿ ICC/ANSI A117.1 - Valve control only

RP70536▲ 1.75 GPM Shower Head

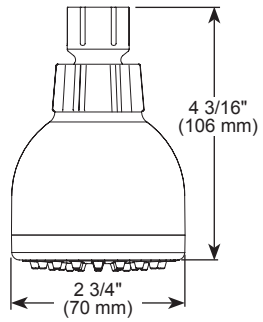

RP44121▲ Pull-Up Diverter

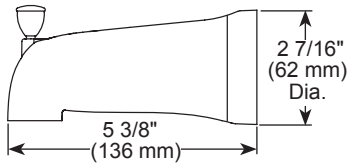

RP71609▲ Pull-Up Diverter

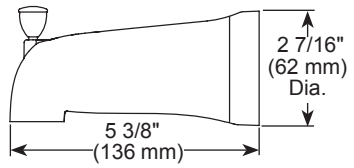

1/2-14 threaded tub spout with slip-on adapter included

▲ Designate proper finish suffix

Delta Faucet Company reserves the right (1) to make changes in specifications and materials, and (2) to change or discontinue models, both without notice or obligation. Dimensions are for reference only. See current full-line price book or www.deltafaucet.com for finish options and product availability.

Delta Faucet Company
55 E. 111th Street, Carmel, IN 46280
350 South Edgeware Road, St. Thomas, ON N5P 4L1
© 2026 Delta Faucet Company